THE PROPERTY OF THE DRAWING IS ESTABILISHED BY LAW. IT IS FORBIDDEN TO PRODUCE OR SHOW IT TO THIRD PART, WITHOUT A WRITTEN AGREEMENT.

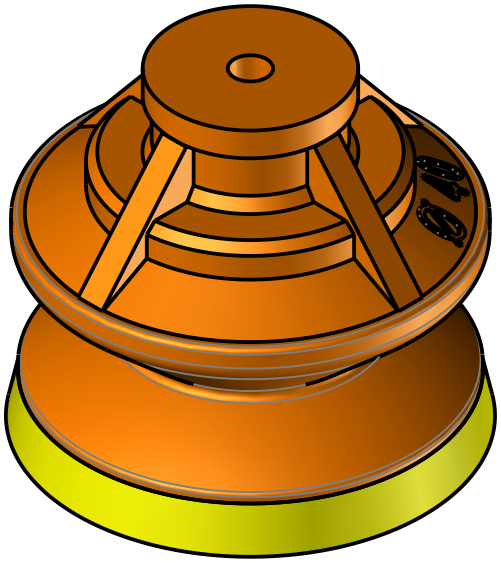

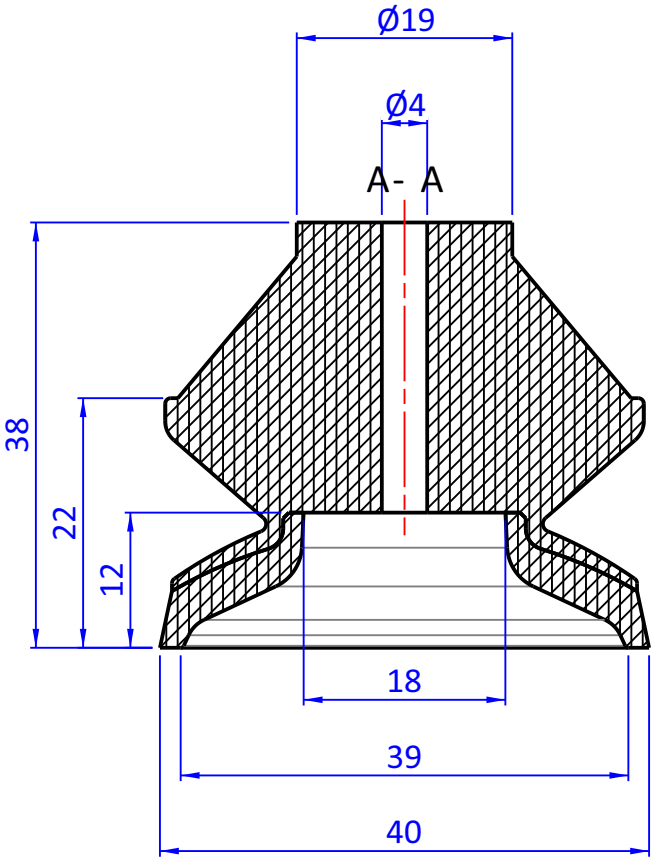

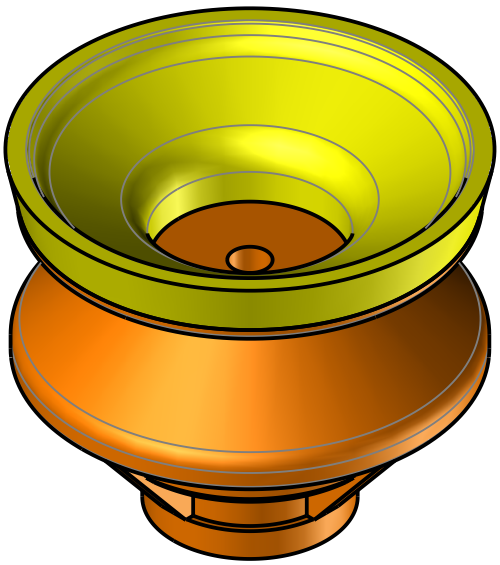

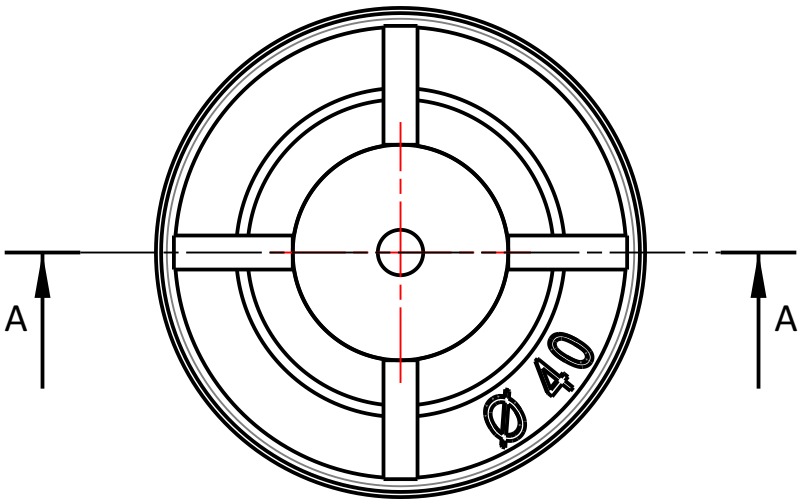

Format A4 UNI 936-76	FPSERVICES AUTOMATION GENERAL TOLERANCE UNI - ISO 2768 CLASSE f	DESCRIPTION VSB140_Singola	DESIGNED FROM FPS Automation DATE 18/09/2026 CODE CA.VSS140M	REVIEW A WEIGHT 0,012kg